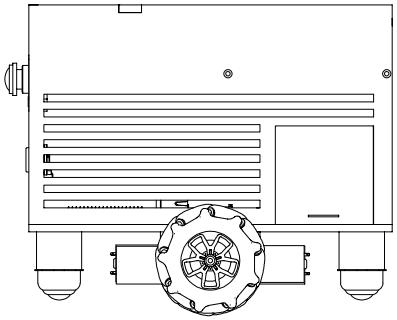

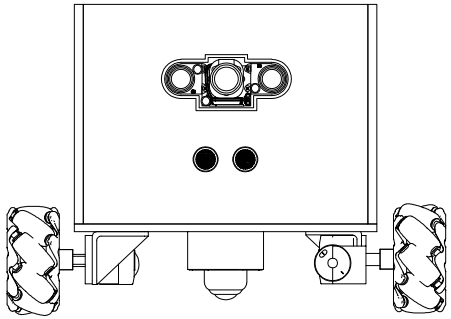

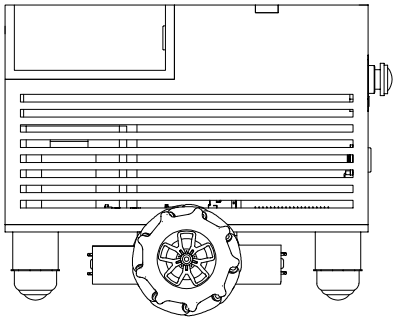

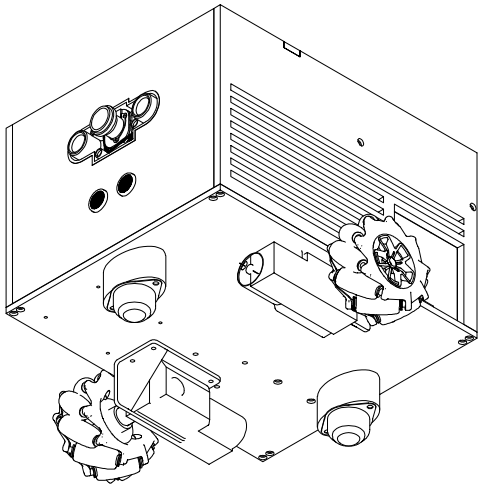

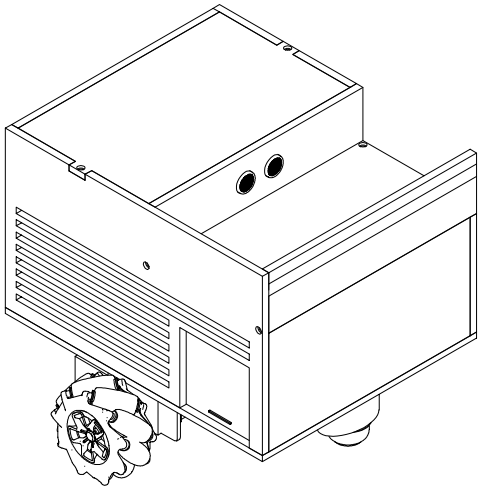

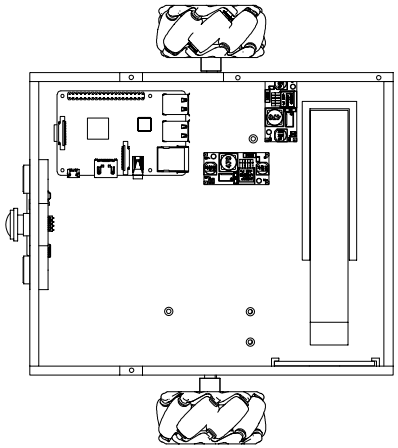

Dept.	Technical reference	Created by Federico Gomez Lotero 7/03/2026	Approved by	
		Document type	Document status	
		Title carro utp 1	DWG No.	
			Rev.	Date of issue	Sheet 1/1